Technical data
6MK32/9

Revision no	Page:
	1

	Receiver	From
Company name		
Respons. Department		
Person in charge		
Phone number		
Fax no		
E-mail address		

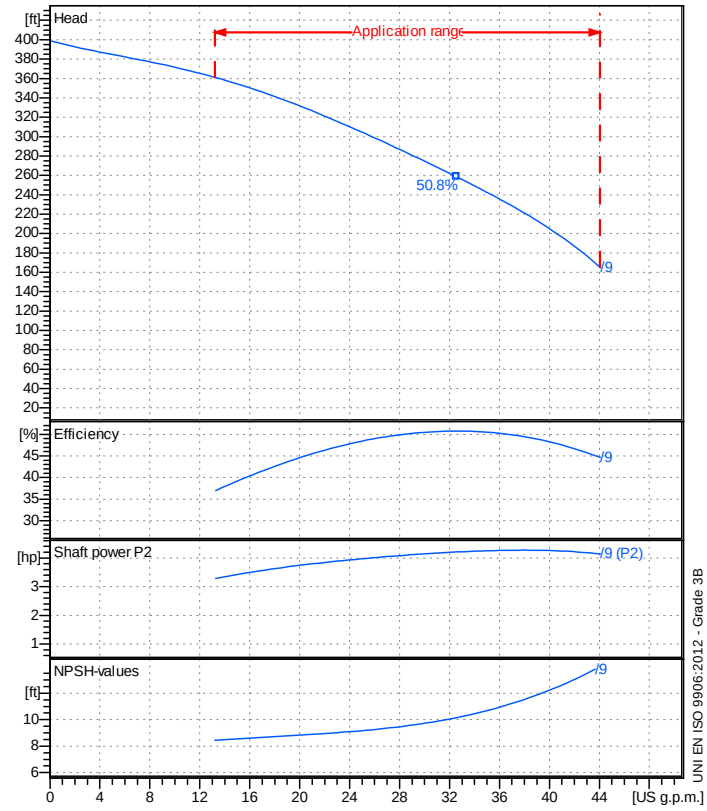

Operating data specification

Nominal flow	US g.p.m.	0
Nominal head	ft	0
Static head	ft	0
NPSH - value of plant	ft	0
Inlet pressure	psi	1.42
Fluid		Water, pure
Operating temperature t A	°F	68
Density at t A	lb/ft³	62.32
Kin. viscosity at t A	ft²/s	1.082E-5

Pump

Pump name			6MK32/9	
Size				
Design				
Speed rpm	3500		No of stages 9	
Impeller type			Radial impeller	
Flow	Nominal		US g.p.m.	
	Max-		US g.p.m.	44.1
	Min-		US g.p.m.	13.2
Head	Nominal		ft	
	Max-		ft	361
	Min-		ft	165
Head H(Q=0)			ft	399
NPSH 3%			ft	
Max. working pressure			psi	173
Shaft power			hp	
Efficiency			%	
Max absorbed power			hp	4.271

Materials Pump

Shaft	Stainless steel AISI 431 (1.4057)
Impeller	Stainless steel AISI 304 (1.4301)
Diffuser	Stainless steel AISI 304 (1.4301)
Gasket	EPDM Rubber
Base	Cast iron EN-GJL-250
Spider	Cast iron EN-GJL-250
Mechanical seal	BQ1EG (Gra/Sic/EPDM)
Pump pipe	Stainless steel AISI 304 (1.4301)

Motor		Frame size	112M		
Manufacturer / Type		SAER	MT2-V18-IE2		
Rated power	hp	5.3641	Efficiency 4/4		87.6 %
Electric current	A	12.5	Speed	rpm	3550
Electric voltage	V	460V	3~	Hz	60
Starting mode		Unknown			
Degree of protection		IP 55	Insulation class		F

Dimensions in inch

H	17 3/8	T	33 11/16
L	11 7/8		
øD	8 1/4		

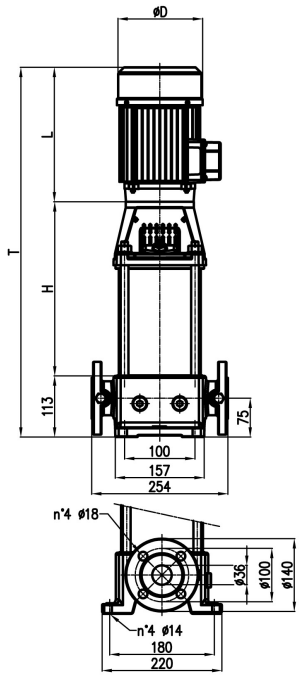

Remarks:

Project	Project ID	Created by	Created on	Last update
			9/9/2022	

Performance curves
6MK32/9

Revision no	Page:
	2

Receiver	From
Company name	
Respons. Department	
Person in charge	
Phone number	
Fax no	
E-mail address	

Operating area	Flow		Head	
Operating data specification	0	US g.p.m.	0	ft
Pump data		US g.p.m.		ft

Impeller type	Radial impeller
Impeller construction	Closed
Sense of rotation	Clockwise from the drive end
Outlet width	DN32

	Flow			Head		Shaft power P2		
	Min.	Max.	η Max.	H(Q=0)	η Max.	P2(Q=0)	Max.	η Max.
	US g.p.m	US g.p.m	US g.p.m.	ft	ft	hp	hp	hp
	13.2	44	32.6	399	259		4.27	4.21

Speed	rpm	3500
Frequency	Hz	60 Hz

Performance data based to: Water, pure [100%] ; 68°F; 62.3lb/ft³; 1.08E-5ft²/s

UNI EN ISO 9906:2012 - Grade 3B

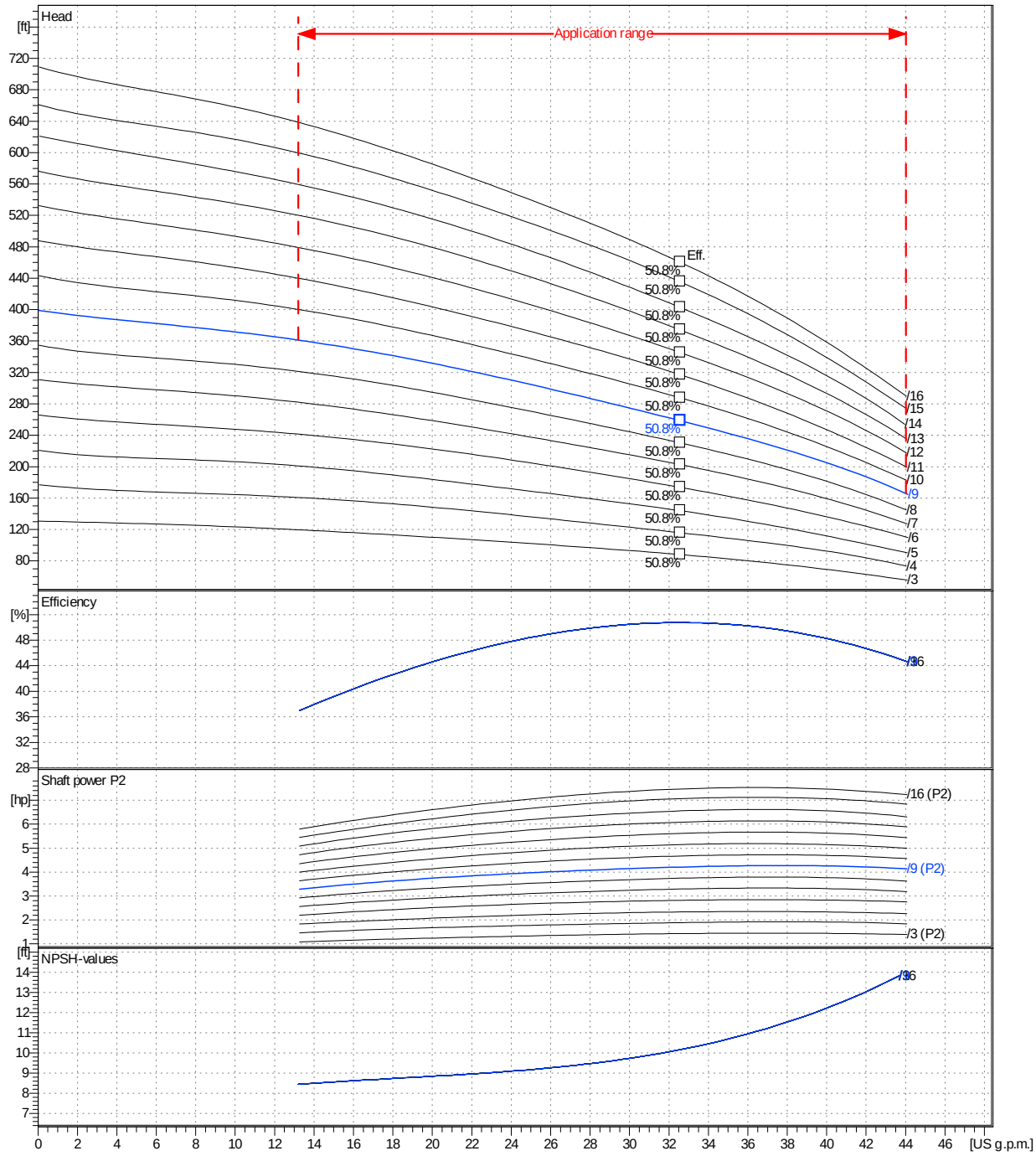

Project	Project ID	Created by	Created on	Last update
			9/9/2022	

SAER ELETTROPOMPE	Spare parts 6MK32/9	Revision no	Page: 3

Company name		
Respons. Department		
Person in charge		
Phone number		
Fax no		
E-mail address		

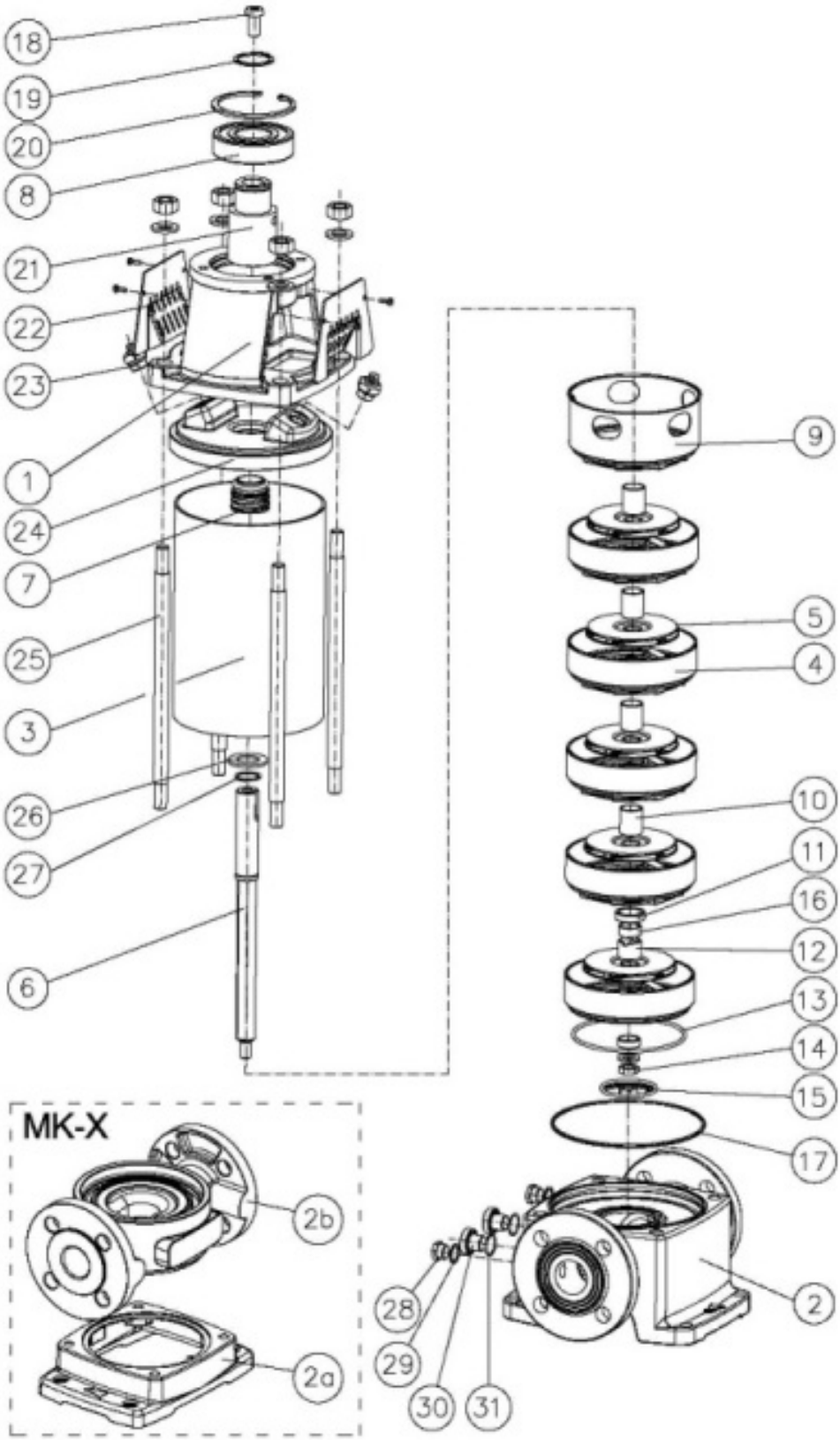

Project	Project ID	Created by	Created on **9/9/2022**	Last update